Idaho SIEC
P25 Update

John Facella, P.E.
Director of Public Safety Markets

Tyco Electronics

Agenda

- Capable
- Compliant
- Competitive
  - P25 System Offerings
  - Idaho’s Advantages
- Summary
- Q&A

About M/A-COM

- 80 years of experience in Land Mobile Radio
- More than 3,000 employees worldwide
- Recognized technology leader in IP-based networks
- Key US locations
  - Lowell, MA
  - Lynchburg, VA (2 facilities)
  - Harrisburg, PA
  - Albany, NY
  - New York, NY
  - Las Vegas, Nevada
  - Field service offices nationwide & internationally

- Major Markets served
  - Public Safety, Homeland Security
  - Federal
  - Utilities
  - Transportation and Transit

M/A-COM's early roots in Public Safety Communications …

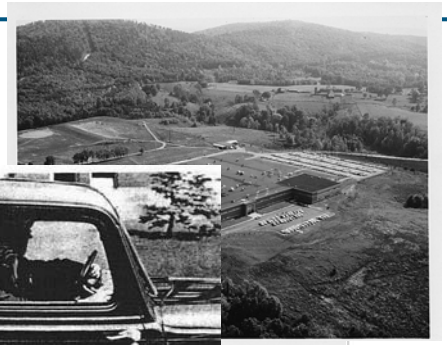

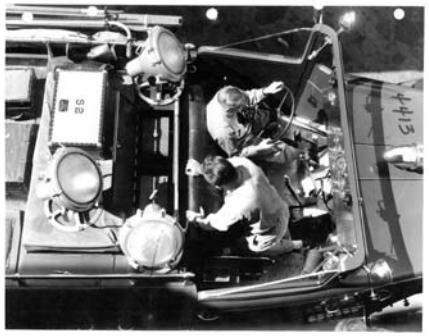

M/A-COM's 80 Year Heritage: Technology Leadership

- **1928: Mobile radio for railroads demonstration for US Commerce Dept (GE)**
- 1931: AM communications for NY & NC State Police, FDNY, US Border Patrol
- **1933: One of First patents in FM**
- 1934: Boston PD 2 way AM system
- 1938: FM vs. AM demonstrations for US Navy, US Army, FCC in 1939
- 1940: Douglas Co Sheriff NB, FM 2 way system
- 1947: First single unit mobile radio (MC202)
- 1955: First 100 watt mobile (Progress Line)
- 1958: First solid state portable receiver (Progress Line portable)
- 1962: First solid state transmitter
- 1964: First solid state 10 watt transmitter (PortaMobil)
- 1965: First solid state motorcycle unit

M/A-COM's 80 Year Heritage: Technology Leadership

- 1977: Pioneers first trunking sys with GE MARC on Sears Tower, Chicago
- 1987: 16 Plus digital trunked system
- 1991: EDACS 2nd generation digital trunking
- 1995: First deployment of OTAP in the industry
- 1995: TDMA IP system for FedEx
- 1999: OpenSky 2 slot TDMA IP trunking for public safety
- 2002: NetworkFirst IP based interoperability
- 2002: OpenSky 4 slot TDMA (6.25 KHz channel equivalency) trunking
- **2003: P25IP**
- 2004: VIDA Network

Some M/A-COM customers…

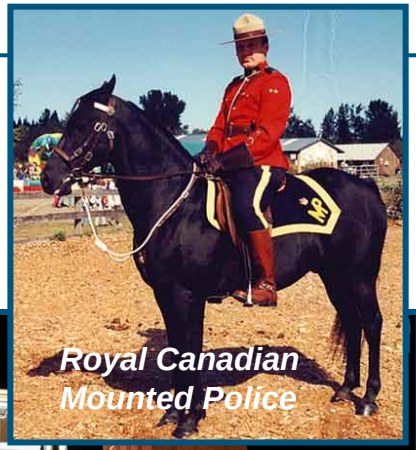

Some of M/A-COM's larger systems

More than 600 trunked systems worldwide including:

– Miami Dade County	28,000 users
– Mexico City	23,000 users
– **Fed Ex**	**>700 sites**
– **State of PA**	**>500 sites**
– **AEP**	**240 sites**
– **SaskTel**	**180 sites**
– **State of Florida**	**150 sites**
– **TXU**	**120 sites**
– **CPFL (Brazil)**	**91 sites**

Two of the largest trunked systems in the world

Military Systems:

- **National Capital Region**
- **75 US Navy Ships**
- **> 50 ships of other navies**

Statewide Systems:

- Nevada
- NY State SWN, $2B 20 year contract
- Pennsylvania, 27 State agencies
- Florida SLERS, 12,000 state agency users

Four major state-wide systems

M/A-COM P25[IP] Systems

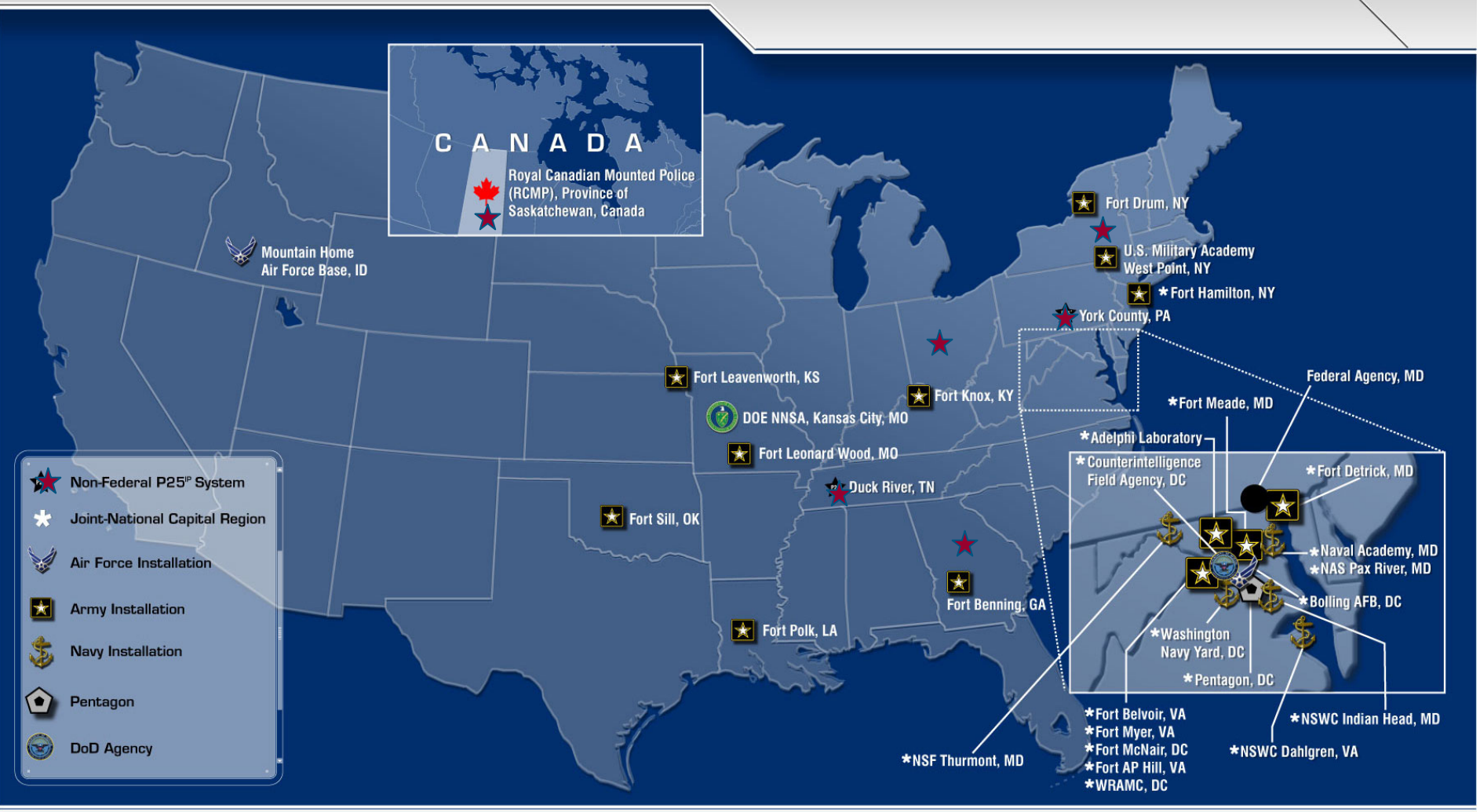

35 Systems and Growing

tyco Electronics

M/A-COM

ECR-7408

Some of M/A-COM's Military P25^{IP} Systems

- **Joint National Capital Region**
  - Phase I – 11 Army Bases & Pentagon
  - Phase II – Follow-on Order for Naval District Washington, Bolling AFB and Marine Corps Indian Head

- **West Point**
  - VHF Multi-site P25 Trunked
  - 1000+ Subscriber radios from multiple vendors

- **Mountain Home Air Force Base, Idaho**
  - VHF Multi-site P25 Trunked
  - 1000+ Subscriber radios from multiple vendors

Some of M/A-COM's Public Safety P25^{IP} Systems

- **RCMP Saskatchewan:**
  - **VHF P25 Ph 1 trunking, 170 sites total, 150,000 sq. mi. coverage area**
  - **28 site Pilot System Accepted**
  - **Unique satellite backhaul for key remote sites**

- **York County PA:**
  - **UHF T Band P25 Ph 1 trunking, Simulcast, 22 sites**

- **Spalding Co GA:**
  - **800 MHz P25 Ph 1 trunking, Simulcast, 5 sites, upgradability to Ph 2**

- **NY State SWN:**
  - **VHF P25 Ph 1 conventional, hybrid system, largest US LMR contract**

State of New York

STATEWIDE WIRELESS NETWORK

M/A-COM

Largest Public Safety Communications Project in U.S. History

- **Hybrid system: VHF, 700 MHz, 800 MHz, P25, OpenSky 4 slot TDMA**
- **Coverage: 95% Area, 97% Roads**
- **Operate & Maintain for 20 Years**
- **Build & Deployment in 5 years**
- **NetworkFirst Interoperability with local agencies**
- **Two geographically separated NOCs**
- **12 Regions, currently deploying Buffalo region and NYC**

Agenda

- Capable
- Compliant
- Competitive
  - P25 System Offerings
  - Idaho's Advantages
- Summary
- Q&A

What is Project 25?

- Goal: Interoperable digital radio systems
- P25 Technology is defined by key interfaces
- Air Interfaces allows multi-vendor procurement
- Wireline Interfaces connect systems

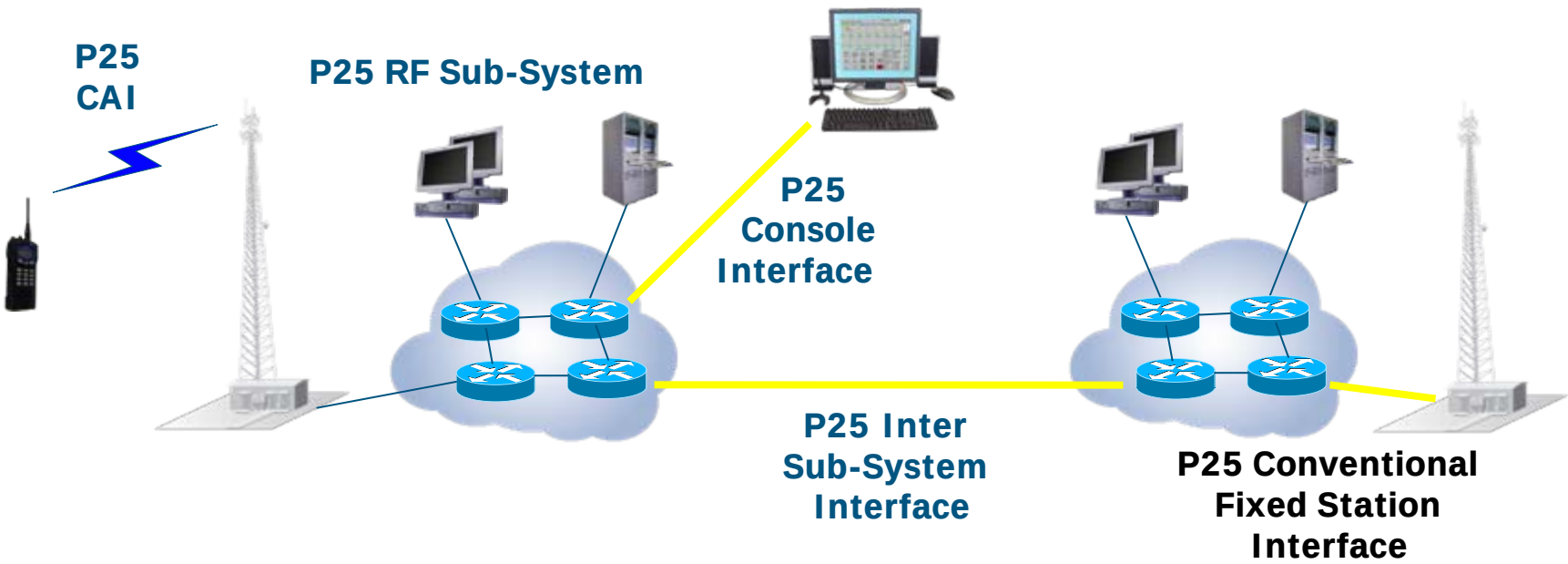

Project 25

LMR Standards Bodies for North America

- ***TIA TR-8 – Mobile and Personal Private Radio Standards***
- ***APCO Project 25—Digital Radio Standards***

TIA P25 Standards Statistics

- **Standards Progress:**
  - **Over 50 published standards (~ 7 in 2005; 3 in 2006 w 6 ready for 2007)**
  - **~ 44 standards in progress**

- **Meeting/Working Time: 540 hours per year (2005-2006)**

- **M/A-COM TIA Standards Participation:**
  - **Over 8 Chair or Vice Chair Committee Positions**
  - **8 to 10 engineers attend one-week meetings, 2-4 attend F2F, > 2 CC**
  - **Over 8 top engineers working full time**

P25 Inter Sub-System Interface (ISSI)

- 3 M/A-COM demos:
  - APCO 2006
  - At General Dynamics lab 2007
  - APCO 2007 Multi-vendor demo
- ISSI Status:
  - It can be put into RFPs now
  - Roaming, other features coming soon
- Benefits:
  - Allows sys – sys Interop (e.g., VHF to 800) at network level
  - Sys can be built in phases, with different vendors for each phase – no longer locked into one vendor!

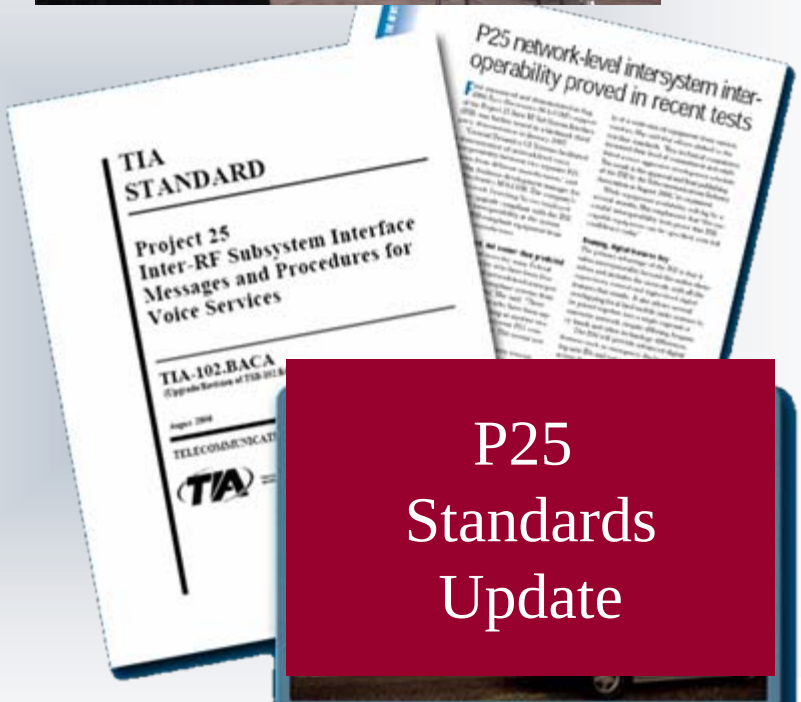

P25 Standards Update

P25 Linear Modulation for Simulcast

- Moto LSM was not part of P25 standard, creating inconsistent subscriber performance
- M/A-COM brought LSM alternatives to TIA
- TIA decided to allow multiple implementations in P25, but subscriber receivers will decode all implementations

P25 Standards Update

P25 Phase 2 from 2002 to January 2007

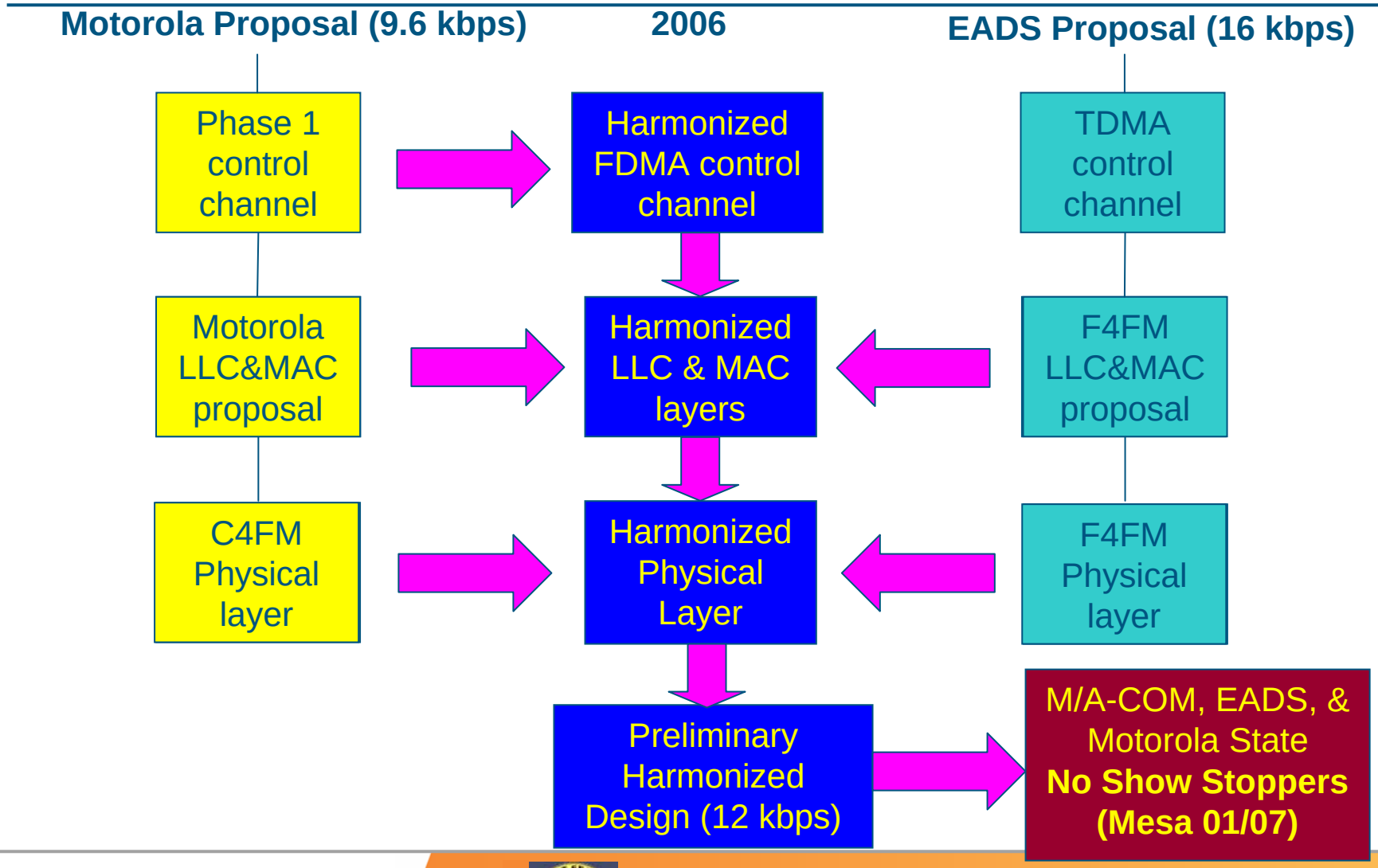

P25 Phase 2 from January 2007 to Present

- Many discussions, intensive effort on harmonization

- 27 April 2007 TIA Steering Committee votes, selects 12 kbps Harmonization Proposal TDMA (2-slot, 12.5 kHz) standardization
  - Advanced vocoder and modulation technologies to improve spectrum efficiency 2X without compromising perfo
  - Asymmetric modulati per TX), H-DQPSK on down or 8-level if additional simulcast
  - Ph 1 trunking contr
  - Dual Rate vocoder, f rate for Ph 2
  - Ph 1 performance s
  - 30 ms slots, Concen inbound and outbound control fun p and Guard times for large systems

- **Standards now in development, est. 24 months to complete (consensus dependent)**

- **Caveat emptor: Some TDMA implementations pretend to be P25 Ph 2**

Why 12 kbps for Phase 2 TDMA

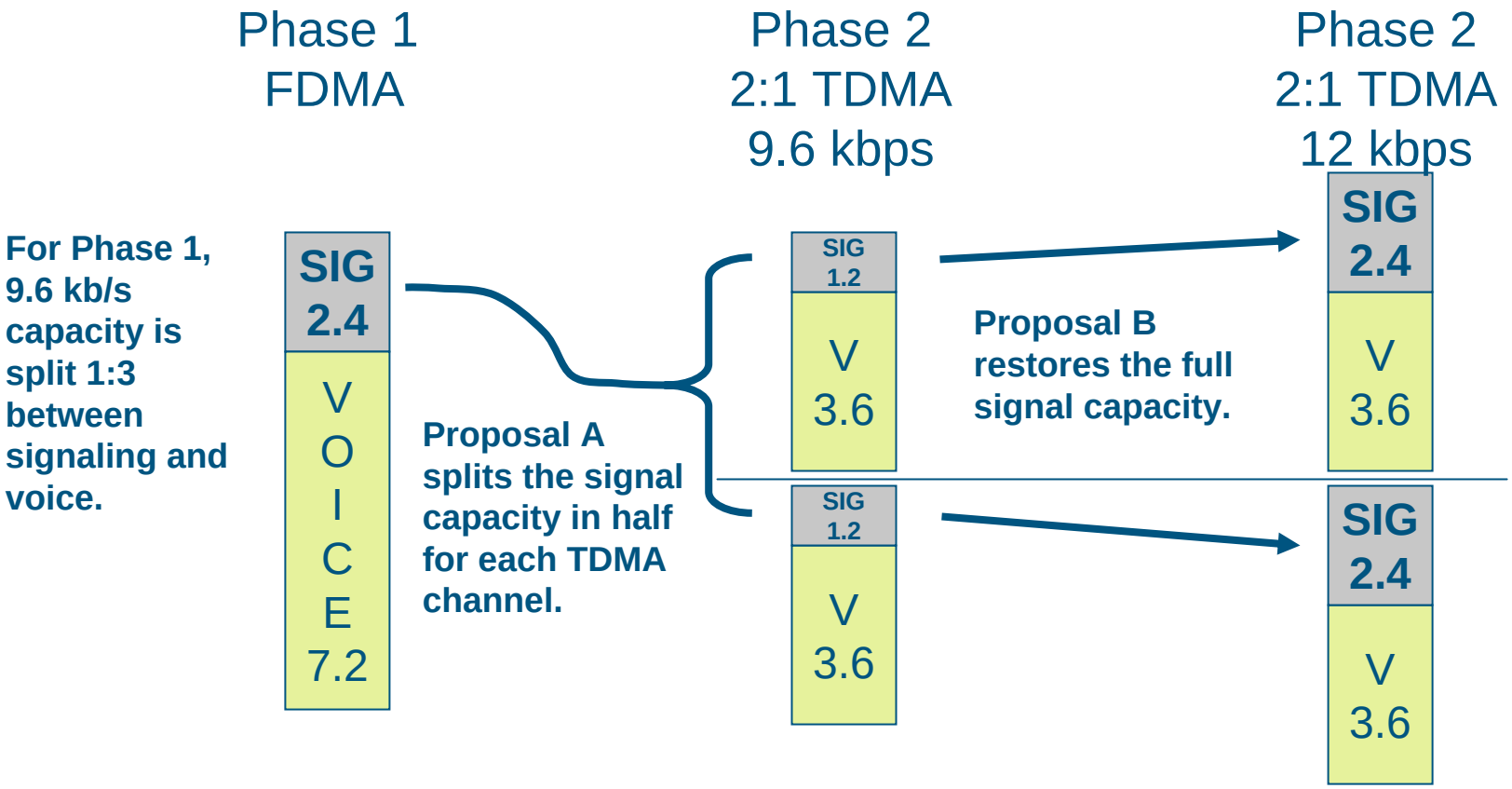

Result is 12 kb/s for Harmonized Proposal

P25 Compliance Assessment Program Timetable

- NIST Handbook for Laboratory Recognition Published – Estimated mid October 07
- NIST Laboratory Assessment Teams Ready to Conduct Assessments – Two teams at time of NIST Handbook Publication
- Trunked Voice Interoperability Standard -- TIA-102.CABC-A, Project 25 Interoperability Testing for Voice Operation in Trunked Systems Published -- Estimated Nov/Dec 07
- First ‘Recognized’ Laboratory(ies) – TBD
- First Tested P25 Product(s) – TBD
- First SDoCs Posted to Repository -- TBD

P25 Compliance Assessment Testing Summary

- Testing by Established 'Recognized' Laboratories
- Scopes of Testing: Performance, Conformance, & Interoperability
- Testing Rqmts, Standards, & Bulletins Established by:
  - TIA TR-8 & P25 Standards Bodies in General
  - SAFECOM Consultants in Conjunction with Above for SAFECOM Grants
- Interoperability Testing Required by 'Recognized' Laboratories Representing Greater than 50% of Manufacturer P25 Infrastructure Suppliers
- Results of Testing Documented in Supplier's Declaration of Compliance (SDoCs) (<u>not a certification</u>)
  - Posted to Repository with Available Access by Customers and Other Interested Parties
- Common Air Interface Testing Soon, Other Interface Testing to Follow

Agenda

- Capable
- Compliant
- Competitive
  - P25 System Offerings
  - Idaho's Advantages
- Summary
- Q&A

M/A-COM can provide many types of P25^{IP} Systems

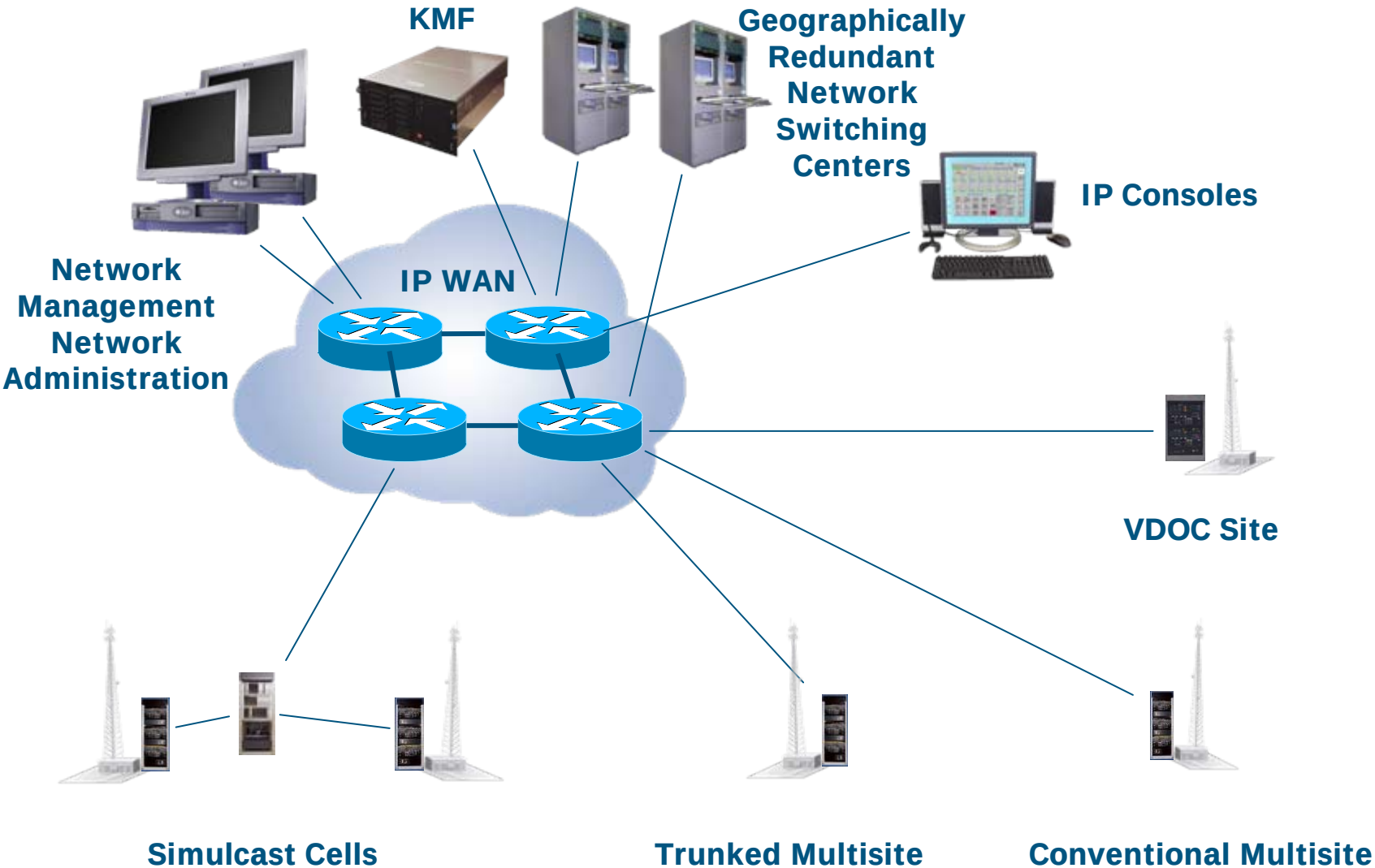

P25^{IP} Network Infrastructure

Network Switching Center

IP WAN

Network Management And Administration

- **End-to-End IP**
- **COTS IP Equipment (Routers <u>do not</u> have custom firmware)**
- **Software Sun Switch**
- **Scalable**
- **Flexible Topology (star, ring, mesh)**
- **Fault Tolerant**
- **Air Interface Independent**
- **High Availability to Eliminate Single Point of Failure**

Split High Availability NSC

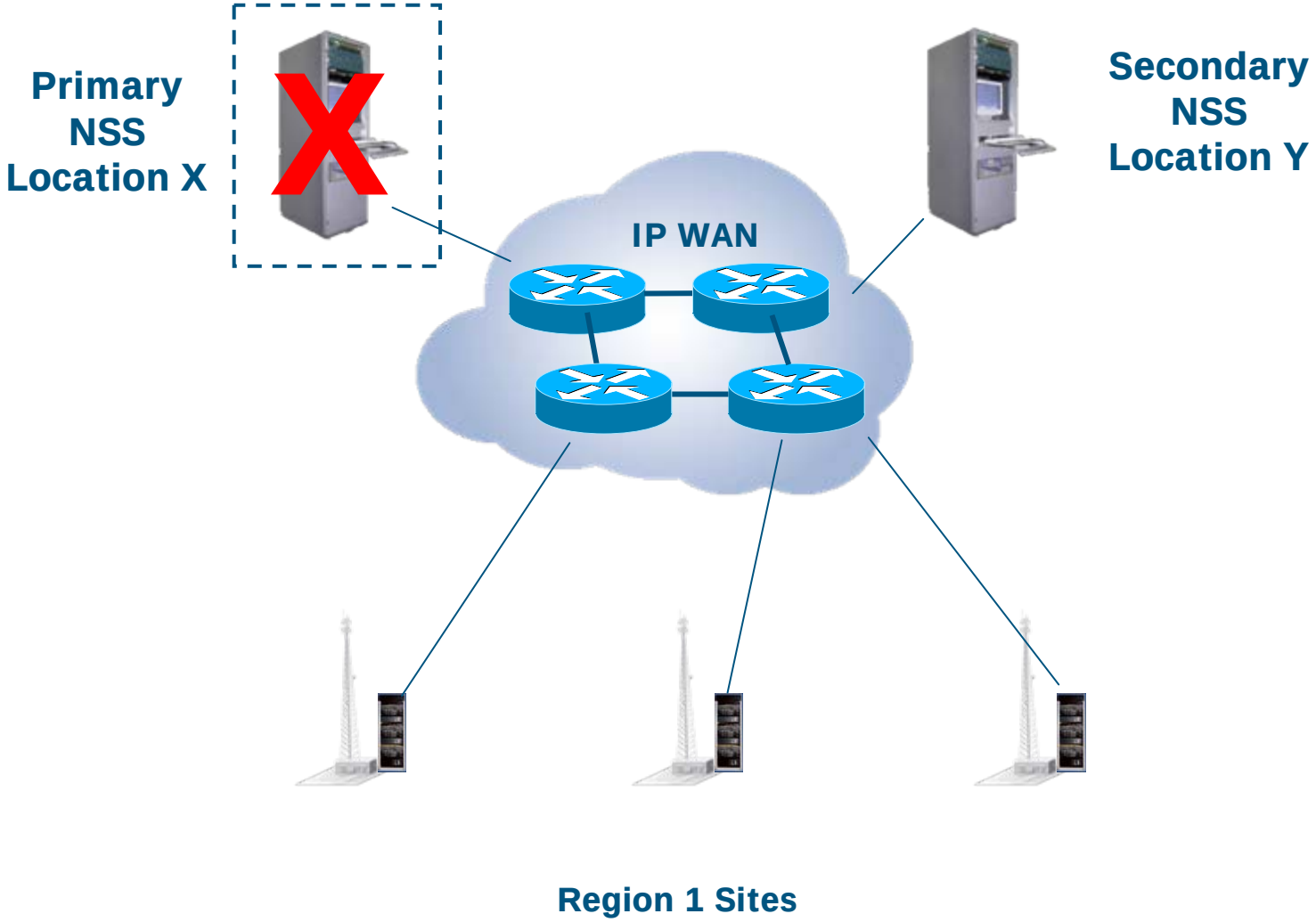

P25^{IP} Management Systems

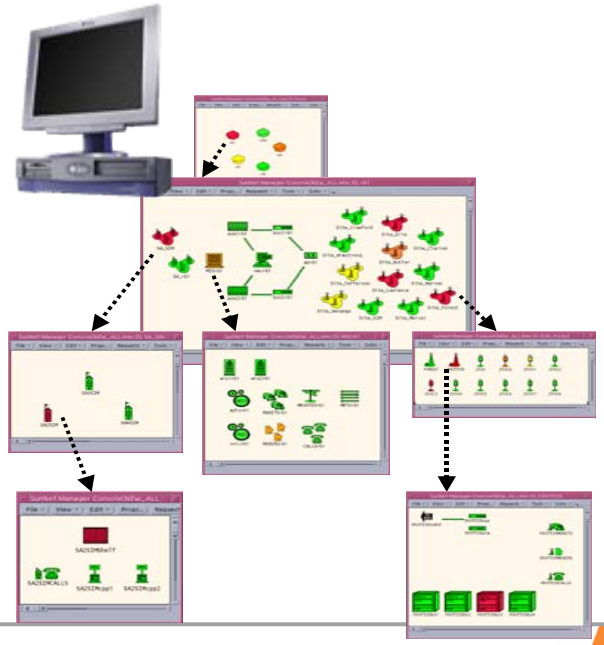

Site Management Systems

- **Local Administration Database**
- **Real-time Airtime Usage**

Network Management Systems

- **Real-time monitoring of network element status**
- **Hierarchical updates on error conditions**
- **Real-time status of network usage**

P25 AES Encryption
Key Management Facility

Network Key Management Facility

- **Only AES encryption is P25 standards compliant & interoperable to other P25 sys & users**
- **AES encryption is approved & used by the federal government – proprietary encryptions have unknown security resiliency and therefore <u>put public safety at risk</u>**
- **Server-based Key Manager**
- **Integrated into P25^{IP} Unified Administration System**
- **Partitioned for Multi-agency Use**
- **Provides Key Sets to Network Infrastructure**
- **Transmits Key Sets via OTAR Messages to Radios using P25 Data Subsystem**

Typical Trunked Base Site

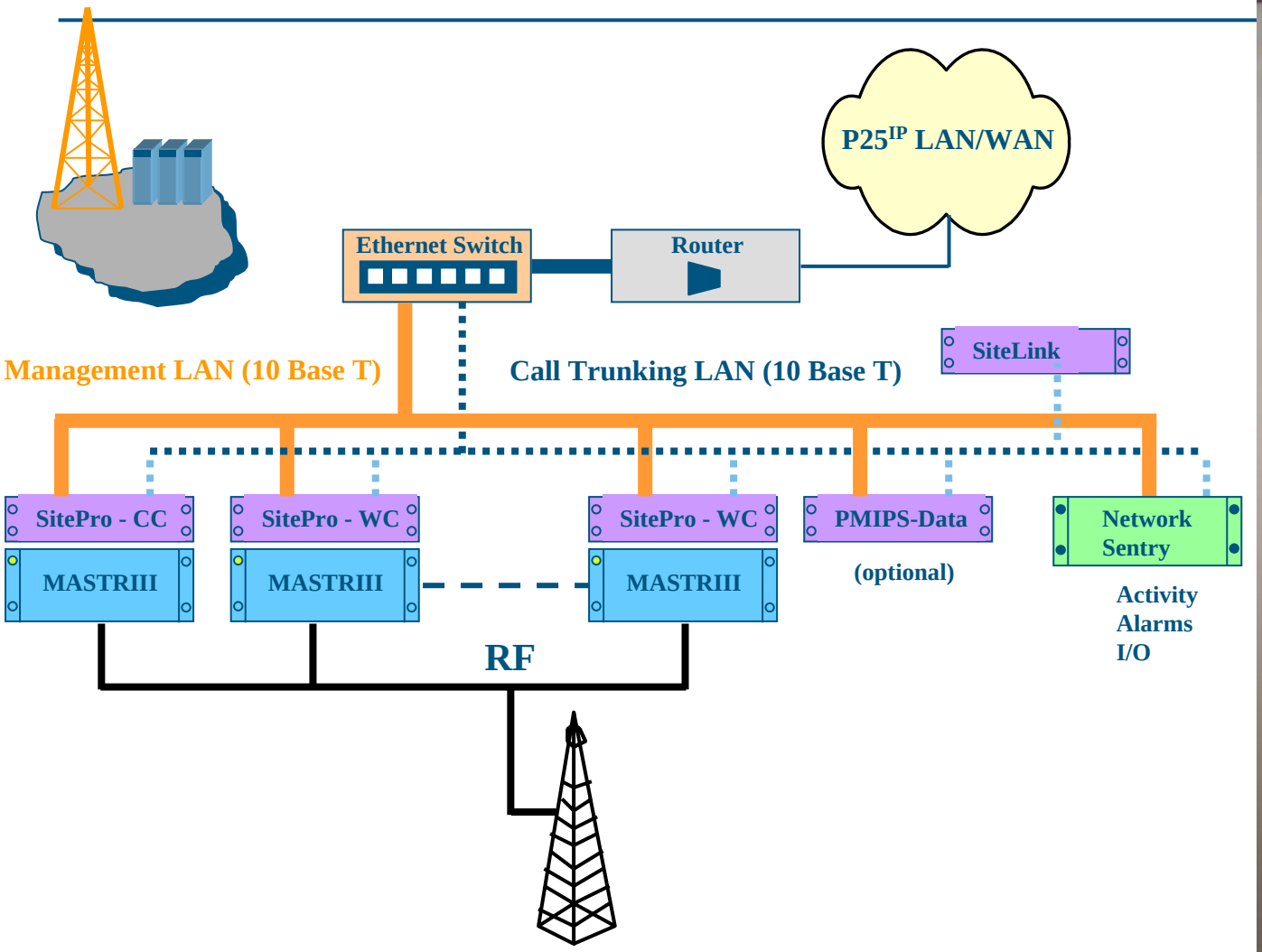

MASTR V Base Station

- 700 MHz
- Linear
- Software Upgradeable to P25 Phase 2
- Compact, Modular Design

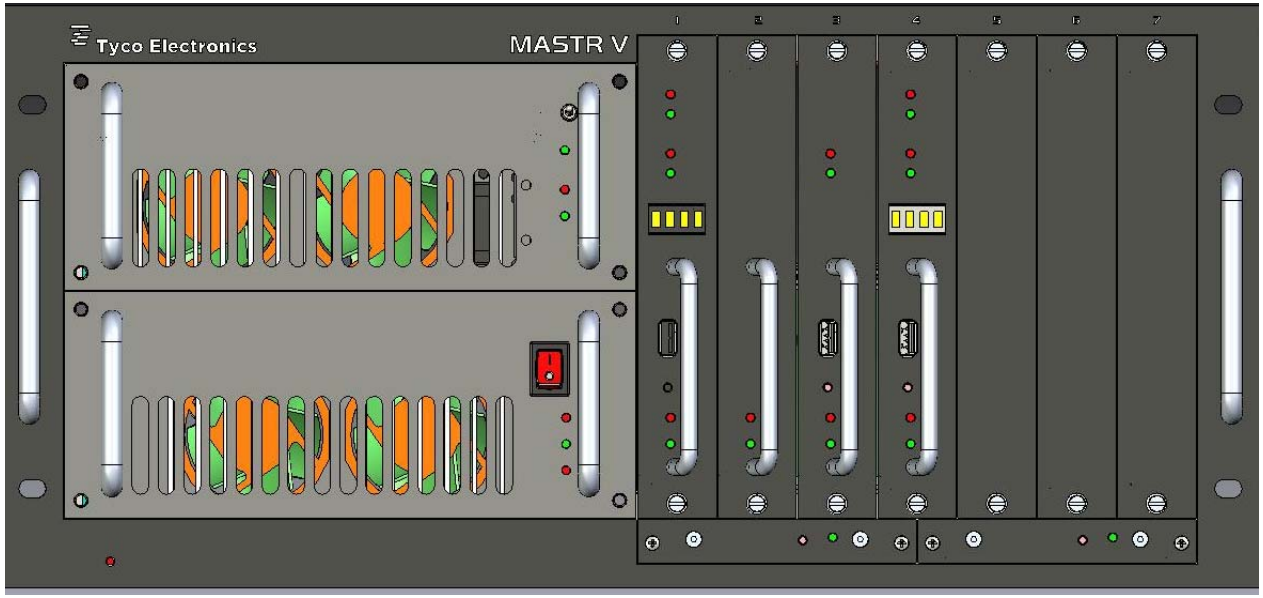

New!

P25IP GPS Simulcast System

Reliability built-in:

- Auto resync
- Fault tolerant design
- Key redundant components
- Test & Alarm
- Bypass operation
- Link re-route

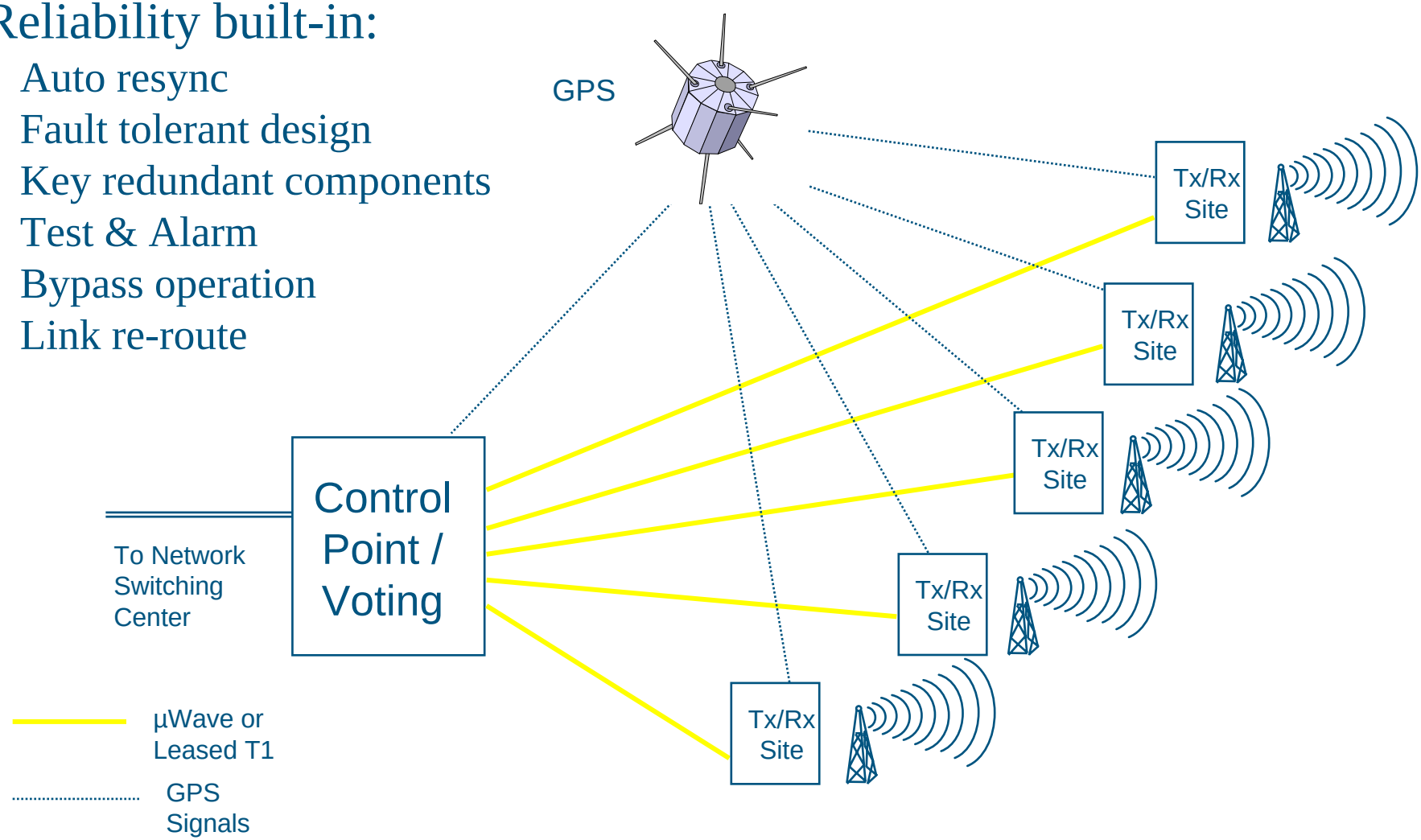

Agenda

- Capable
- Compliant
- Competitive
  - P25 System Offerings
  - Idaho's Advantages
- Summary
- Q&A

Idaho's Advantage #1: VIDA IP Network Backbone

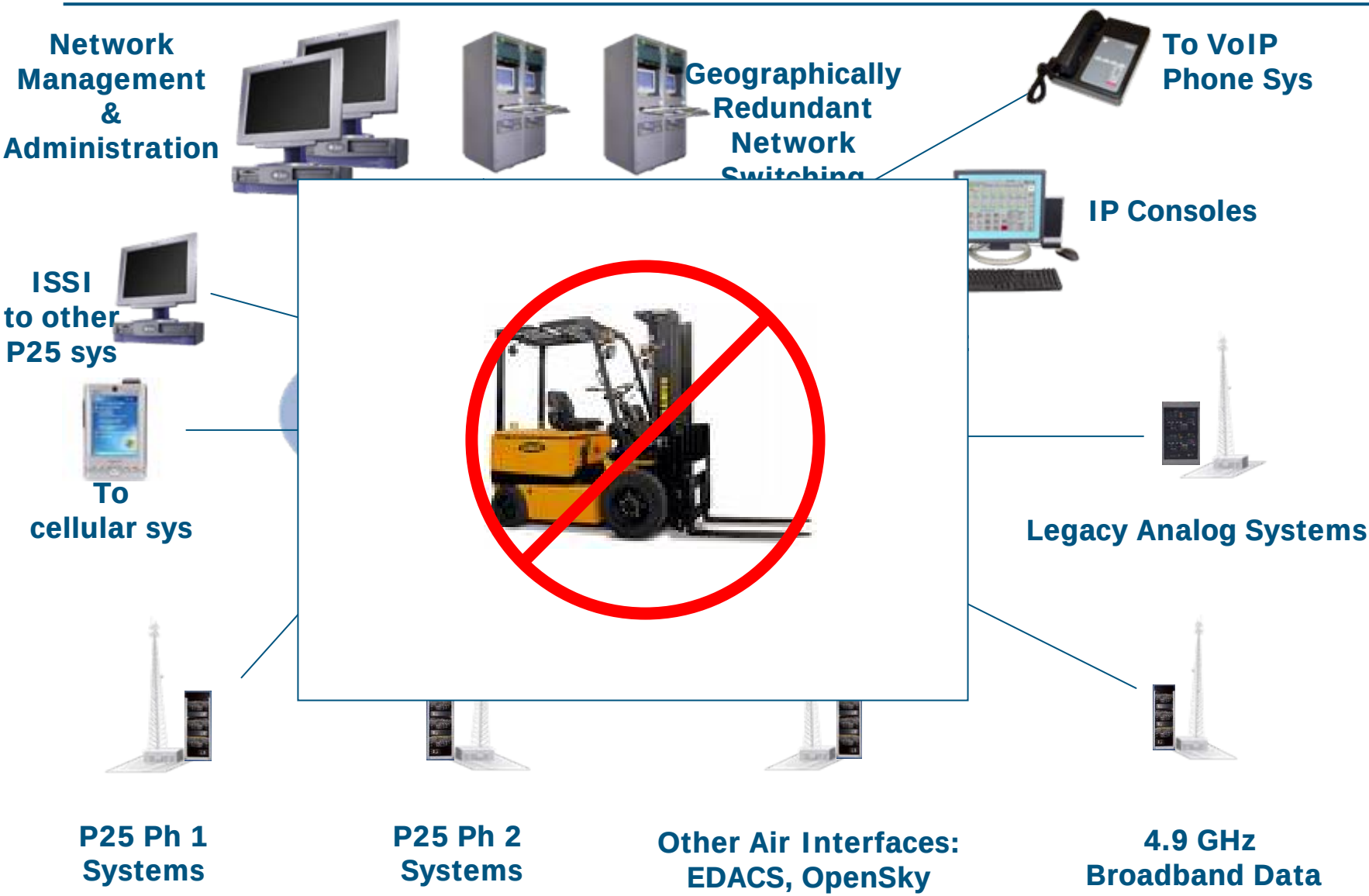

Idaho's Advantage #2: Subscriber Radios with a Future

Common Features:

- Software upgradable to Ph 2
- 700 / 800 MHz
- Text Link option
- GPS option for AVL
- OTAP option

Idaho's Advantage #3: A P25 System with a Future

Migration to P25 Phase 2 can be provided:

- March 20, 2007, the Spalding County Board of Commissioners voted unanimously in favor of the system, which was recommended by a 17-member communications study committee earlier

- "You have a self-healing network that should serve this county for 20 years or more," said Steve Macke, project consultant.

The GRIFFIN DAILY NEWS OnLine

TODAY is TUESDAY, March 20, 2007

County picks MA/COM for 800 MHz system

MA/COM has been selected to install the county's new 800 MHz radio communications system, after nearly a year of debate and discussion.

"You have a self-healing network that should serve the county for 20 years or more," said Steve Macke, project consultant.

The Spalding County Board of Commissioners voted unanimously in favor of the system, which was recommended by a 17-member communications study committee earlier this year.

A majority of committee members recommended MA/COM over Motorola because the latter failed to give a definite price on how much it would cost to move to Phase II of P-25 standards.

…committee members recommended MA/COM over Motorola because the latter failed to give a definite price on how much it would cost to move to Phase II of P-25 standards

Idaho's Advantage #4: OTAP Over-The-Air-Programming

- "ProFile" -updates the radio's personality / profile remotely
  - Note: this is a unique M/A-COM P25 advantage. P25 does not presently specify OTAP.
  - Some M/A-COM customers feel OTAP will save them $millions in system administration

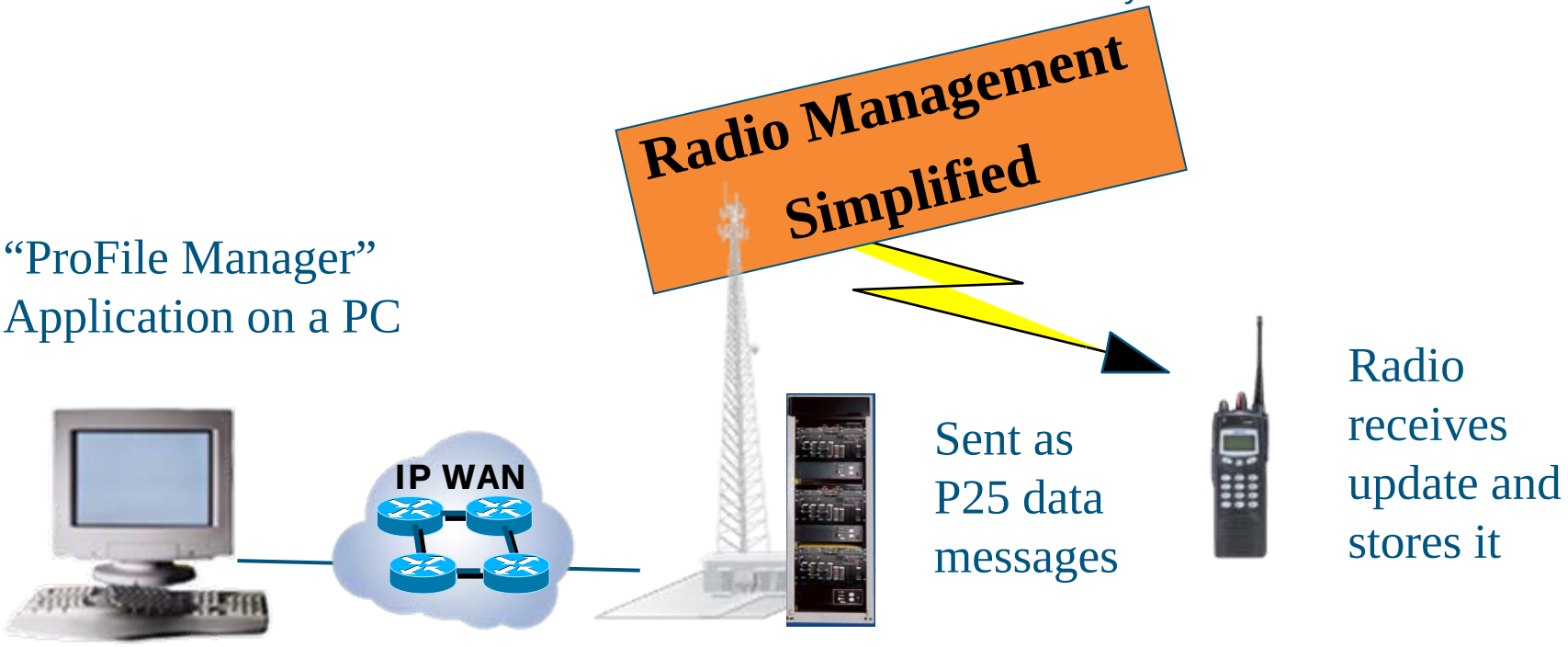

Idaho's Advantage #5: P25^{IP} Network Security

- Information Assurance (IA) has become a primary concern for all public safety and federal customers

- IA must be designed-in, it cannot be effective as an after-thought
  - Variety of technical solutions
  - Defense in Depth
  - Documentation and Social Engineering is a significant portion of the effort

  - M/A-COM is unique in the industry, in receiving very difficult federal DITSCAP security rating, with "Authority to Operate" at 4 military bases: Fort Drum, Fort Polk, Fort Leavenworth, Fort Knox

P25^{IP} Defense In Depth

- Security Update Management Service (SUMS)
  - Test 3rd party security patches/updates
- Anti-Virus
  - Investigate/implement across all Windows and Solaris products
- Boundary Defense
  - Firewalls in one or more locations in the network for remote client and diagnostic access
- Bulk Encryption
  - Encryption of all traffic across network
- Intrusion Detection and Prevention
  - Part of Boundary Defense to prevent unauthorized access and application behaviors
- System Update Server
  - Push out OS and anti-virus updates from central location to all network devices
- System Log Server
  - Accumulate log file activity records from all devices

Idaho's Advantage #6: Console Choices *TODAY*

M/A-COM Maestro C3^{IP} Console

- Full Featured PC based Dispatch Solution
  - Patch, Simulselect, Emergency
  - IP Connectivity without CEC/CEB
  - Encryption without DVU

M/A-COM V^{IP} Console

- PC software application

M/A-COM V^{IP}R Virtual Control Station

- PC software application

IPC Orbacom T5 Console

Zetron Console

Idaho's Advantage #7: Lower Total Ownership Cost

- No fork lift upgrades with a VIDA backbone network
- Most VIDA network links only require DS0 (64 kbps), not T1s
  - Saving on backhaul cost & complexity between sites & the switches
- OTAP saves $$$ on long term system administration

Agenda

- Capable
- Compliant
- Competitive
  - P25 System Offerings
  - Idaho's Advantages
- Summary
- Q&A

Summary

- Capable: 80 years of experience, technology leader, over 30 P25 sys
- Compliant: Heavily involved in TIA process, drove Ph2 Harmonized Proposal, LSM
- Competitive
  - P25 System Offerings: conventional, trunked, GPS simulcast, VDOC
  - Idaho's Advantages:
    - VIDA IP Network
    - Subscriber radios software upgradable to Ph2, no dead ends
    - P25 Sys with a future
    - OTAP
    - Industry leading P25 Network Security
    - Console choices today
    - Lower Total Ownership Cost

Agenda

- Capable
- Compliant
- Competitive
  - P25 System Offerings
  - Idaho's Advantages
- Summary
- Q&A

Be an informed Buyer –
Ask lots of questions

Thank You